antenova

DATASHEET

CSMAJ041

Connector

1. Features

- PCB edge mounted Female SMA connector
- Maximum PCB thickness is 1.6mm
- SMA F (Female) straight connector
- Gold plated for high reliability
- Rated for >500 cycles of connector insertion

2. General data

Electrical	
Impedance	50Ω
Frequency Range	DC ~ 6GHz
Working Voltage	Max≦335 Vrms
Dielectric Withstanding Voltage	1000 Vrms
Insulation Resistance	≧5000mΩ
Center Contact Resistance	≦3mΩ
Outer Contact Resistance	≦2mΩ
Durability	>500 cycles
VSWR	≦1.30

Mechanical	
Connector Dimensions	13.5mm * 8mm
Connector Pin Dimension	1.30mm
Connector Type	SMA Jack Straight

Environmental	
Hazardous Material Regulation	RoHS compliant
Operating Temperature	-55C to +155C

3. Part number

CSMAJ041

4. Drawing

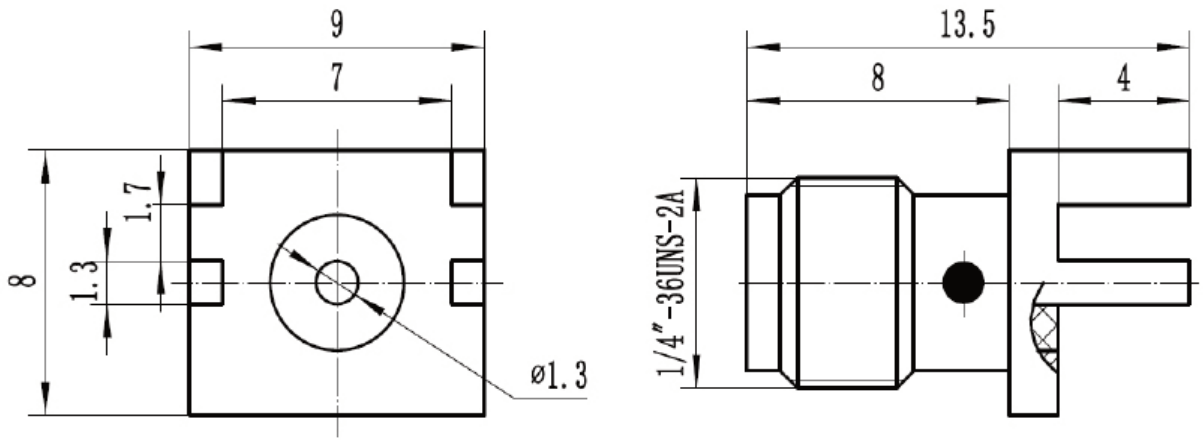

Item	Description	Material	Finish	QTY
1	Body	Brass	Gold	1
2	Insulator	Teflon	White	1
3	Contact pin	Berylium Copper	Gold	1

Quality statements

Antenova's products conform to REACH and RoHS legislation. For our statements regarding these and other quality standards, please see **antenova.com**.

Antenova reserves all rights to the contents of this document. Antenova gives no warranties based solely on the accuracy or completeness of the contents of this document and reserves the right to make changes to the specifications of the products described herein at any time and without notice.

Certification No. 11070
ISO 9001

Datasheet version

2.01 release 10th June 2026

antenova

Antenna design, integration and test resources

Product designers – the details contained in this datasheet will help you to complete your embedded antenna design. Please follow our technical advice carefully to obtain optimum antenna performance.

We aim to support our customers to create high performance wireless products. You will find a wealth of design resources, calculators and case studies to aid your design on our website.

Antenova's design laboratories are equipped with the latest antenna design tools and test chambers. We provide antenna design, test and technical integration services to help you complete your design and obtain the required certifications.

If you cannot find the antenna you require in our product range, please contact us to discuss creating a custom antenna to meet your exact requirements.

Share knowledge with RF Experts around the world

ask.antenova is a global forum for designers and engineers working with wireless technology

Visit Ask.Antenova

Visit antenova.com

Order antenna samples and evaluation boards, and read our antenna resources

Visit antenova.com

Request a volume quotation for antennas:

sales@antenova.com

+ 44 (0) 23 9400 1023

Global headquarters
Antenova Ltd, 7 The Briars,
Waterberry Drive, Waterlooville,
Hampshire, PO7 7YH

Copyright® Antenova Ltd. All Rights Reserved. Antenova®, gigaNOVA®, GNSSNOVA®, the Antenova product family names and the Antenova logos are trademarks and/or registered trademarks of Antenova Ltd. Any other names and/or trademarks belong to their respective companies. The materials provided herein are believed to be reliable and correct at the time of printing. Antenova does not warrant the accuracy or completeness of the information, text, graphics or other items contained within this information. Antenova further assumes no responsibility for the use of this information, and all such information shall be entirely at the user's risk.